Technical Procedure

Stopping During Use: "Safety Stop" Error

Applies to: SM3 (140001)

Latest Rev.

Upon starting or during a workout, the console will display a "SAFETY STOP" error message. This is most commonly due to the sensor being tripped, mis-alignment of the reflector and/or sensor, or failure of the sensor itself. The following information will assist with troubleshooting to determine the cause.

Safety Sensor: 723-0066 Reflector: 723-0226

1. Verify that the reflector is still attached to the machine. This can be done by looking inside the small hole in the left side inner shroud near the bottom step.

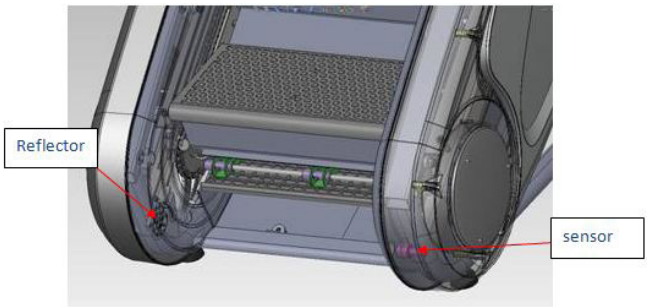

2. Verify that the sensor is able to receive a signal. Place a small mirror or reflector near the hole in the right side inner shroud. Hold the mirror/reflector at a 90 degree angle so that the sensor can reflect back into itself.

TECH TIP: A small amber light will appear on the sensor if it is NOT receiving a return signal.

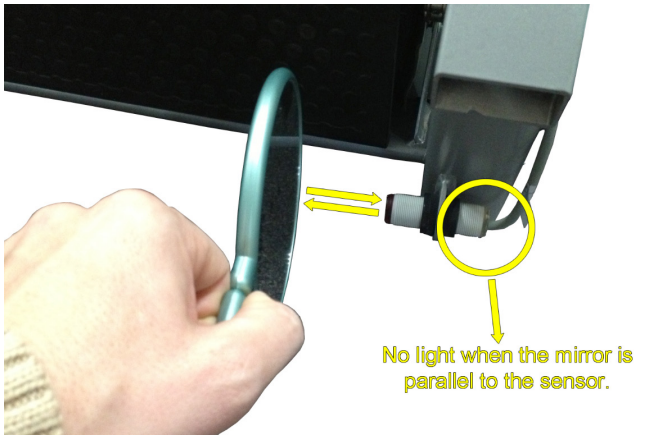

3. Verify that the sensor is not loose on the sensor bracket. The black plastic retaining nuts on either side of the sensor can be loosened and tightened independently to allow for some adjustment in alignment.

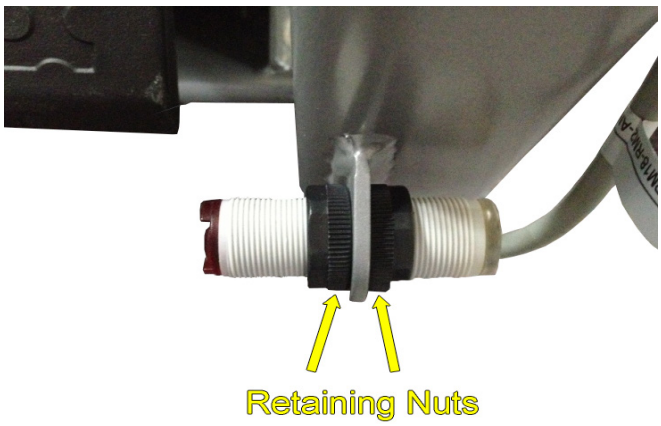

4. Verify that the sensor cable is securely plugged into the lower control board (LCB) and that the cable ins't damaged or punched.

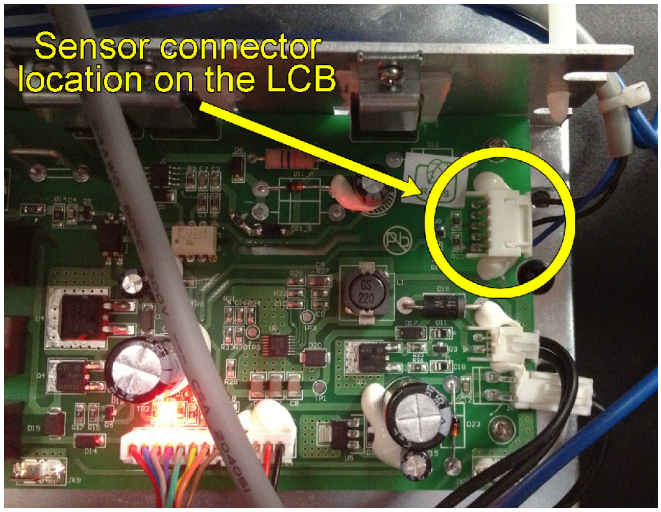

5. If the metal bracket tab that the sensor is mounted to is belt or not aligned properly, remove the sensor and **VERY CAREFULLY** bend the bracket into position.

WARNING: DO NOT bend the bracket more than 5 degrees, doing so could cause damage to the bracket.

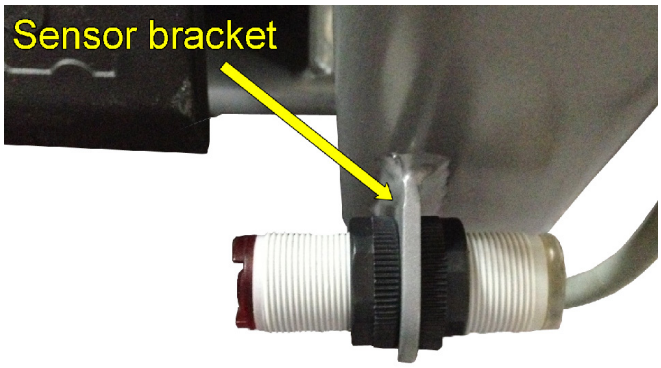

6. If all of the above steps have been performed and the outlined parts have been checked to ensure function, replace the safety sensor.